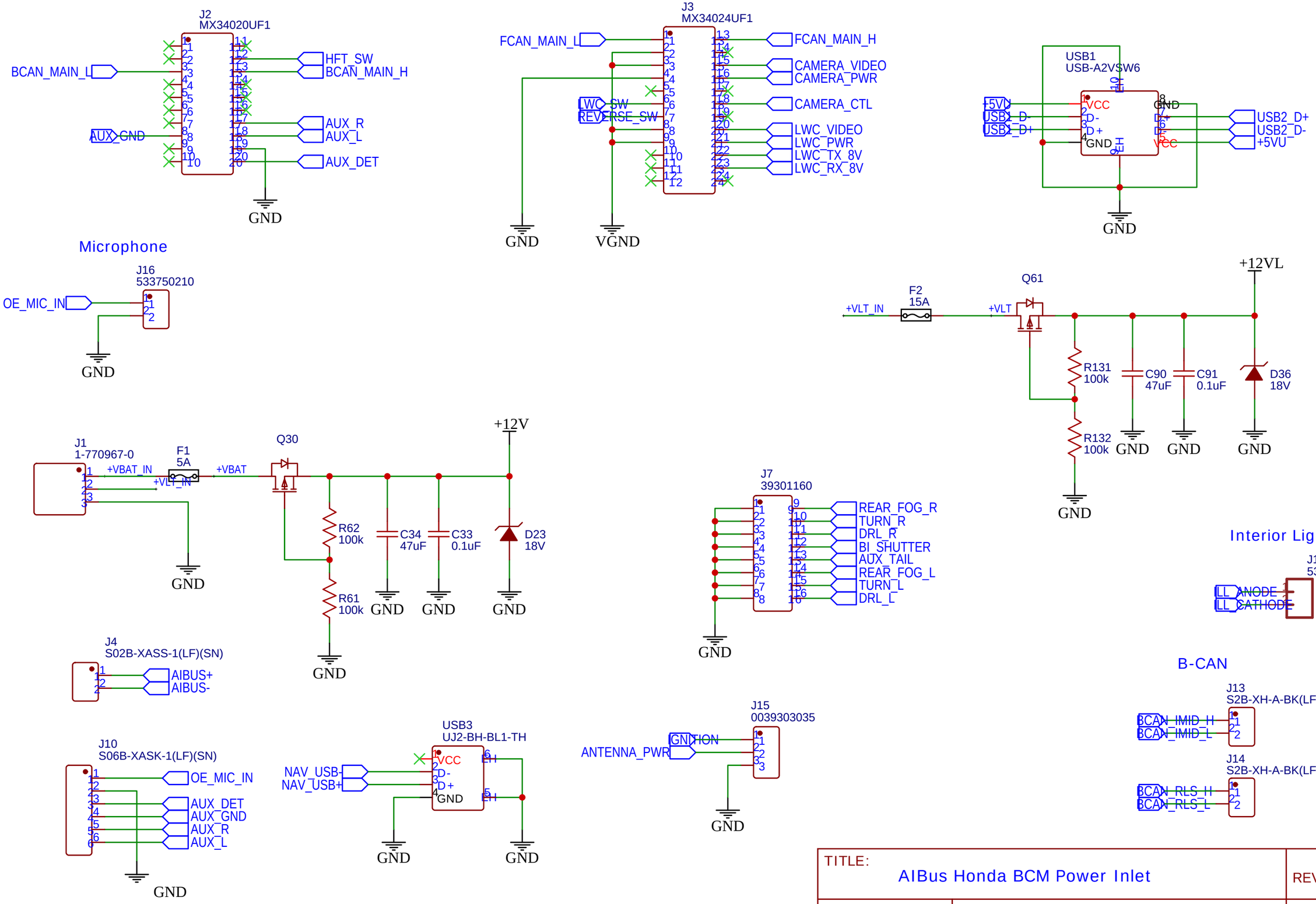

TITLE: AIBus Honda BCM Power Inlet	REV: 1.0
Company: AidF Electronics	Sheet: 1/1
Date: 2025-10-04 Drawn By: Aidan C Franits	

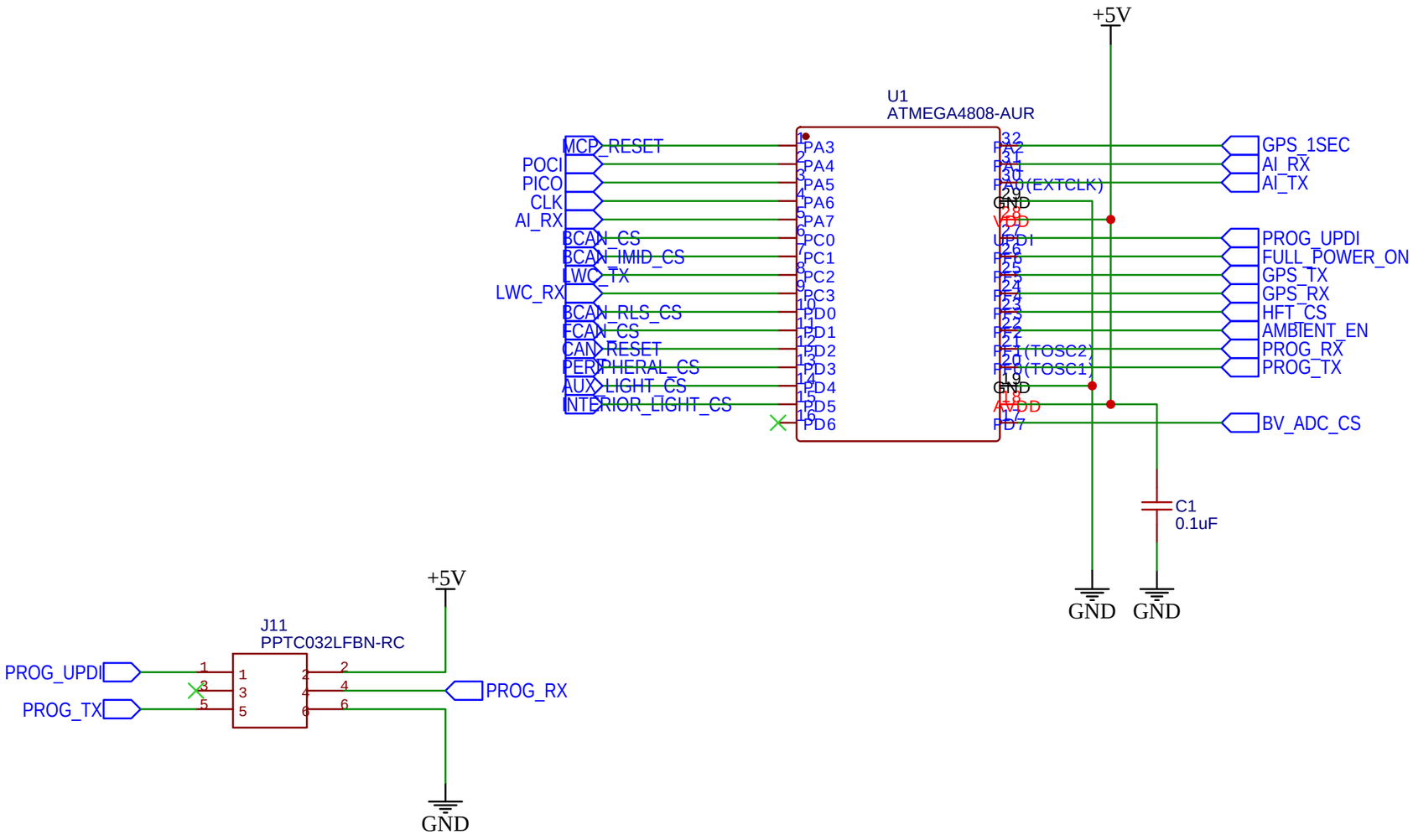

TITLE: AIBus Honda BCM Main Controller		REV: 1.0
EasyEDA	Company: AidF Electronics	Sheet: 1/1
	Date: 2025-10-04 Drawn By: Aidan C Franits	

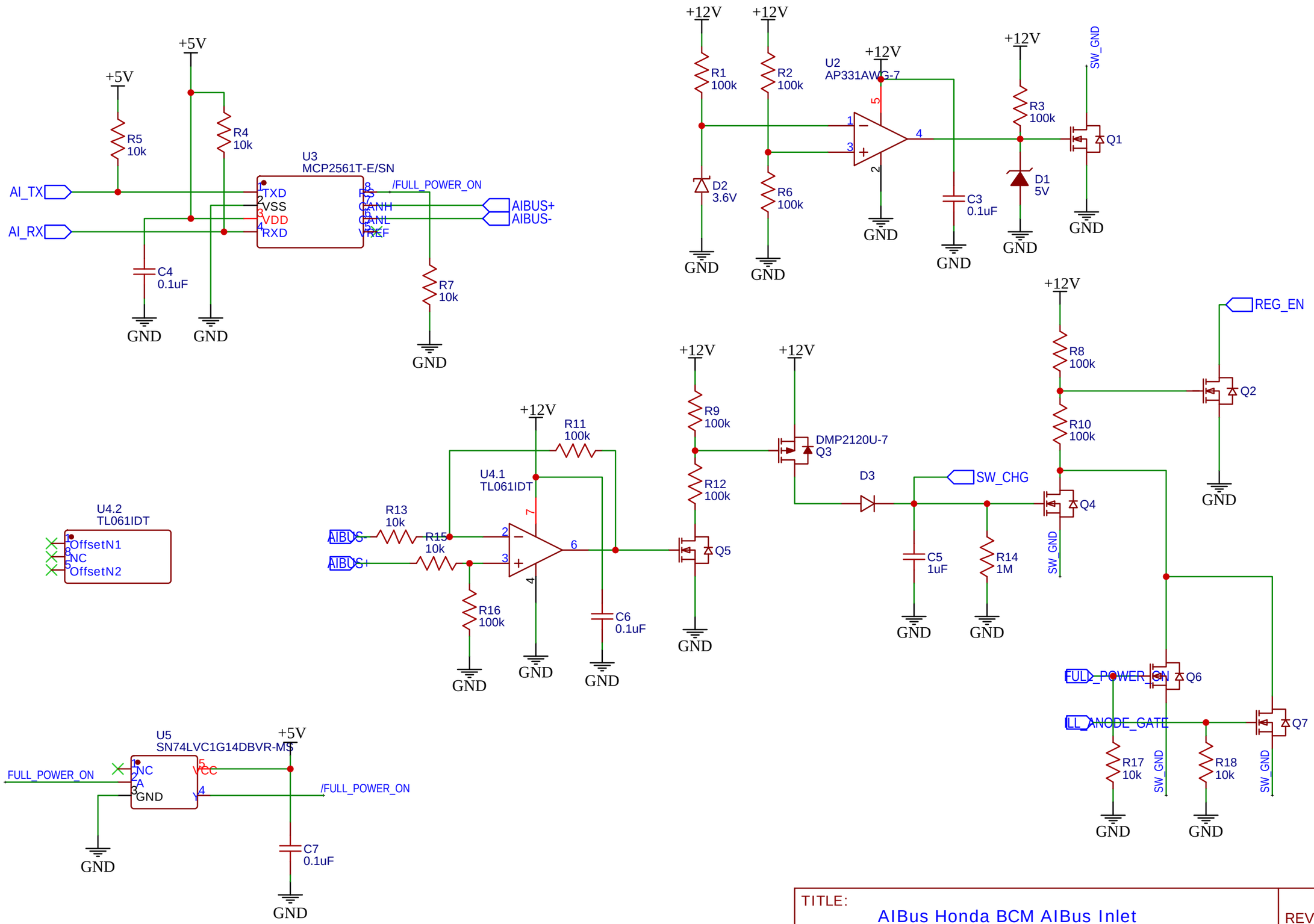

TITLE: AIBus Honda BCM AIBus Inlet	REV: 1.0
Company: AidF Electronics	Sheet: 1/1
Date: 2025-10-04 Drawn By: Aidan C Franits	

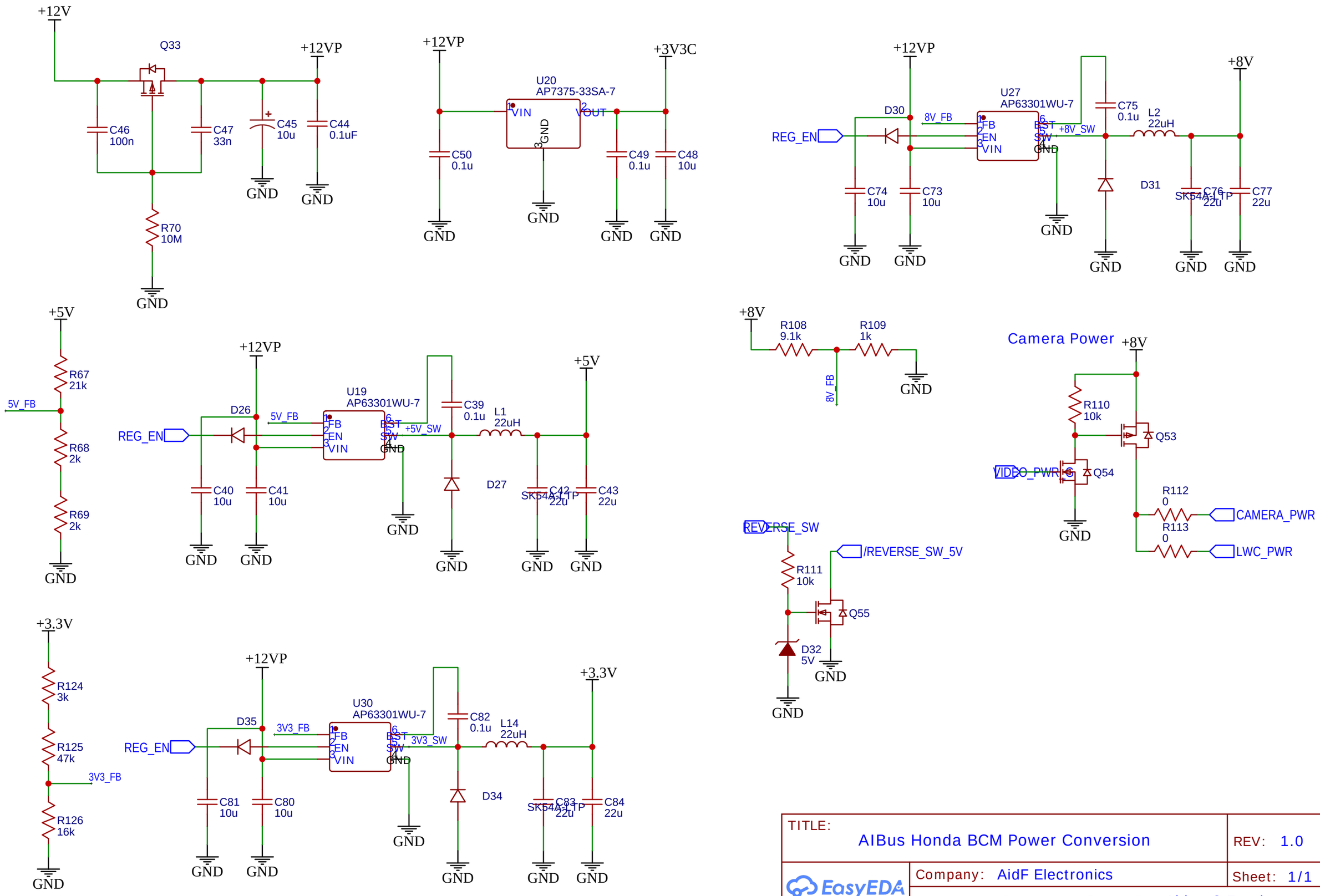

TITLE: AIBus Honda BCM Power Conversion	REV: 1.0
EasyEDA Company: AidF Electronics	Sheet: 1/1
Date: 2025-12-20 Drawn By: Aidan C Franits	

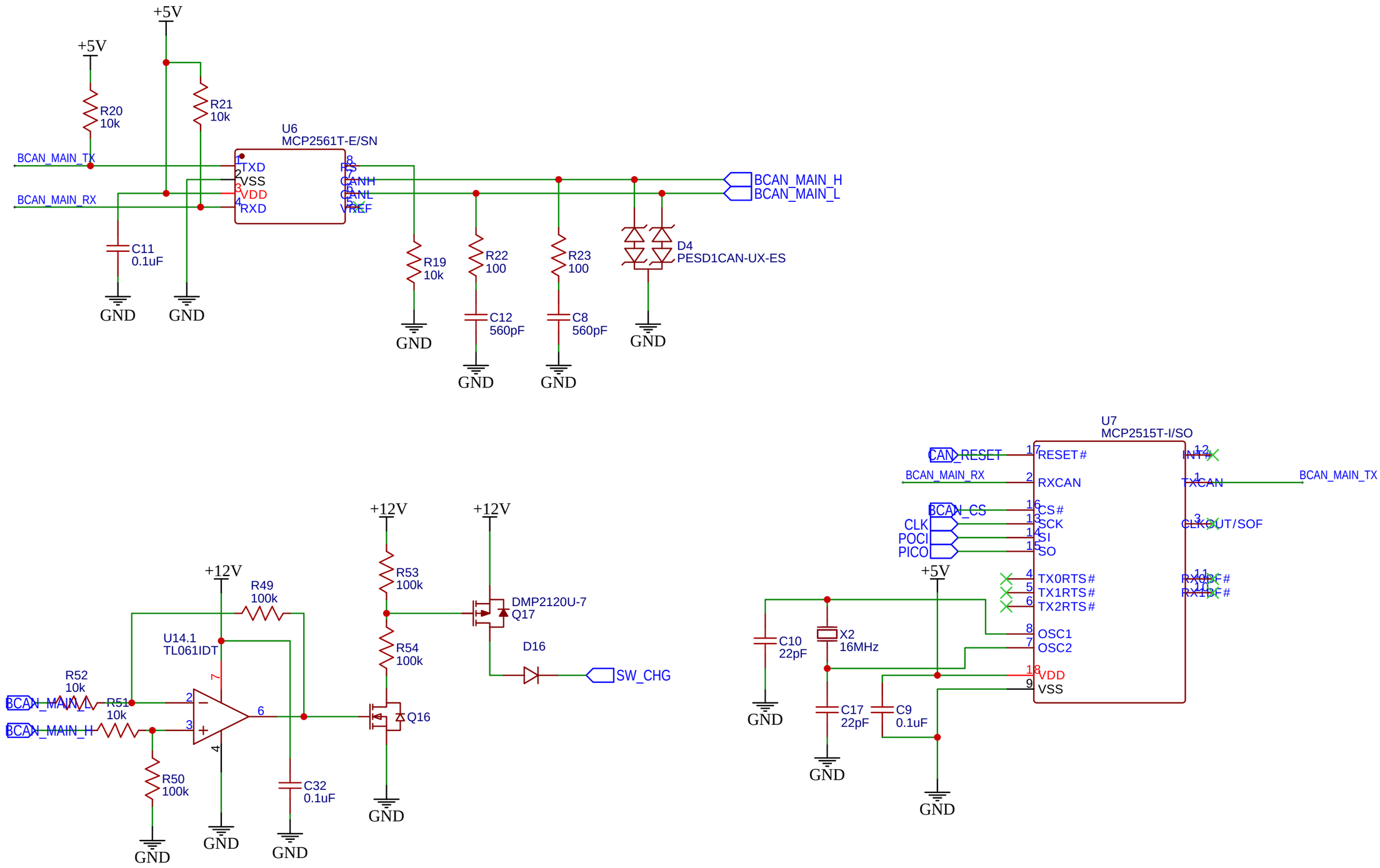

TITLE: AIBus Honda BCM B-CAN Transceiver		REV: 1.0
EasyEDA	Company: AidF Electronics	Sheet: 1/1
	Date: 2025-10-04 Drawn By: Aidan C Franits	

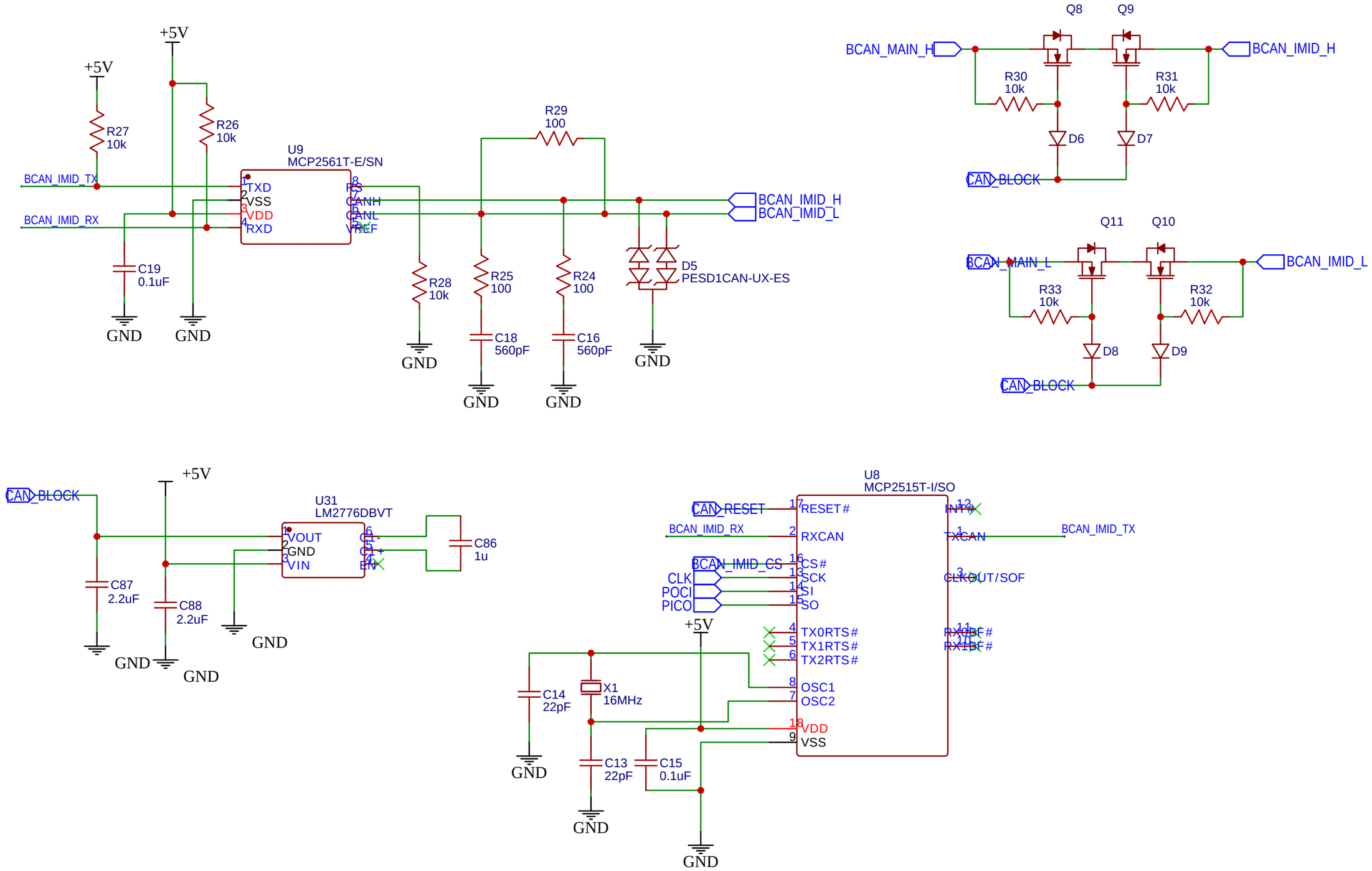

TITLE: AIBus Honda BCM IMID B-CAN Transceiver	REV: 1.0
EasyEDA Company: AidF Electronics	Sheet: 1/1
Date: 2025-10-04 Drawn By: Aidan C Franits	

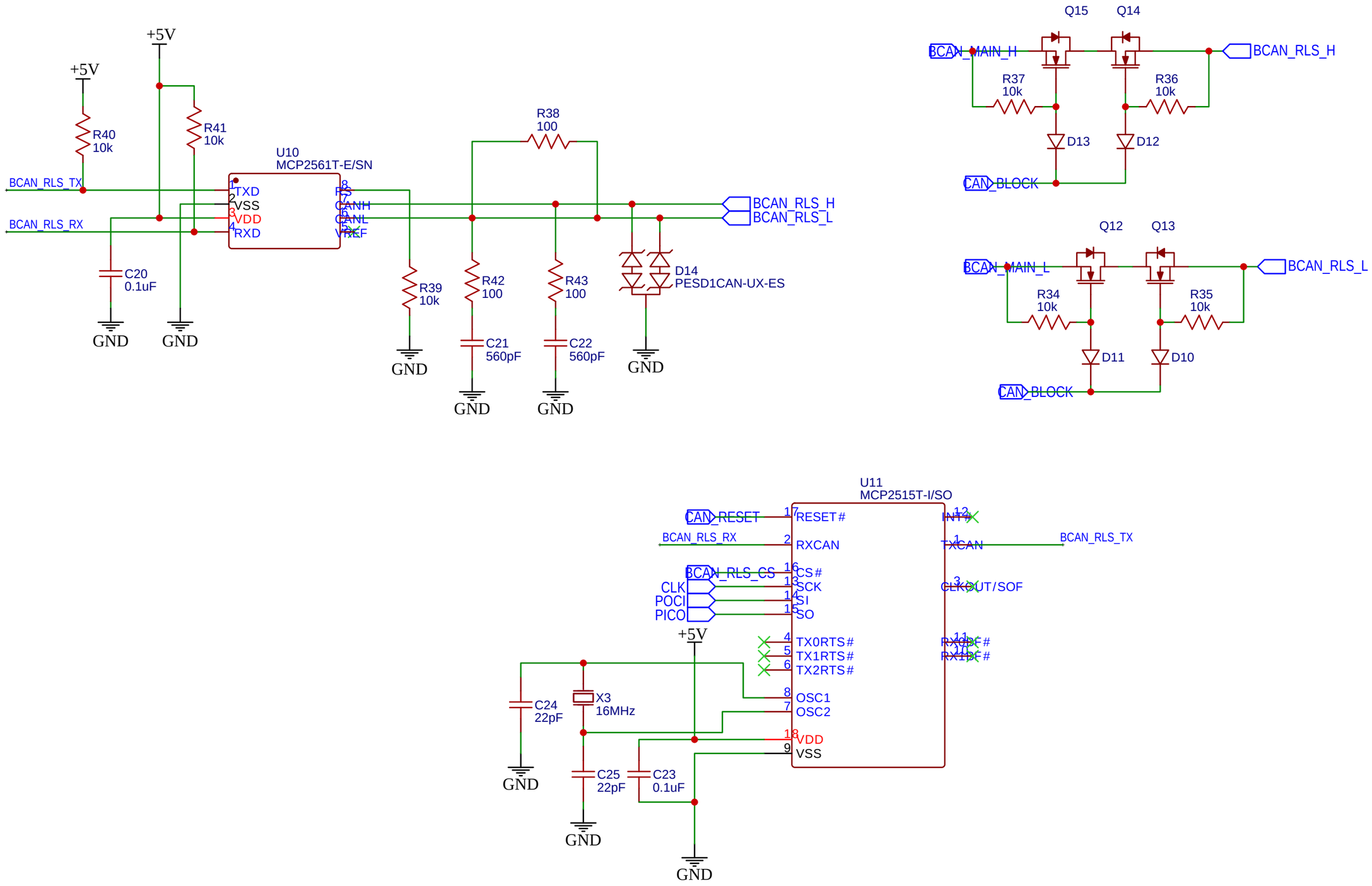

TITLE: AIBus Honda BCM RLS B-CAN Transceiver		REV: 1.0
EasyEDA	Company: AidF Electronics	Sheet: 1/1
	Date: 2025-10-05 Drawn By: Aidan C Franits	

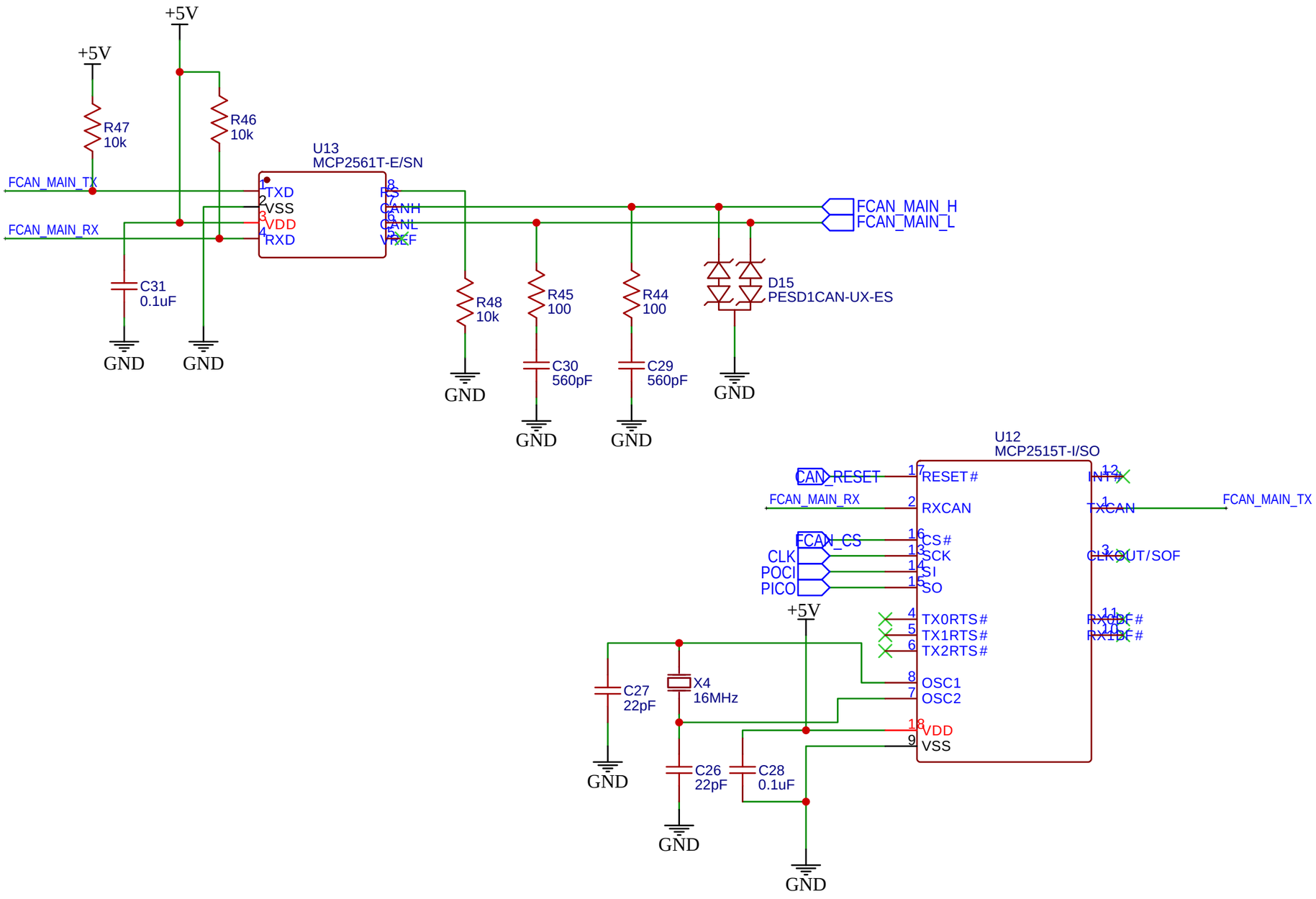

TITLE: AIBus Honda BCM F-CAN Transceiver		REV: 1.0
EasyEDA	Company: AidF Electronics	Sheet: 1/1
	Date: 2025-10-05 Drawn By: Aidan C Franits	

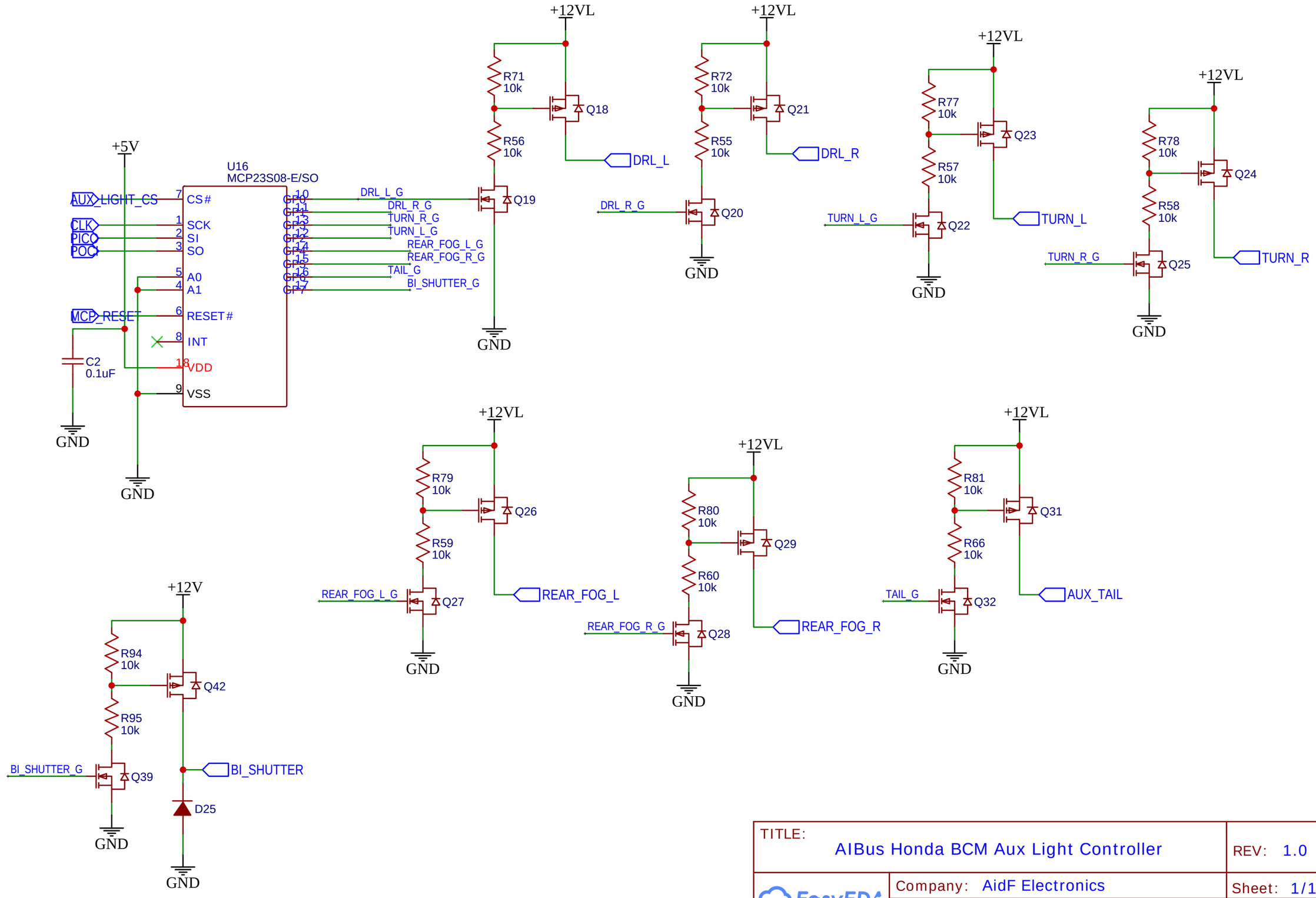

TITLE: AIBus Honda BCM Aux Light Controller		REV: 1.0
EasyEDA	Company: AidF Electronics	Sheet: 1/1
	Date: 2025-11-30 Drawn By: Aidan C Franits	

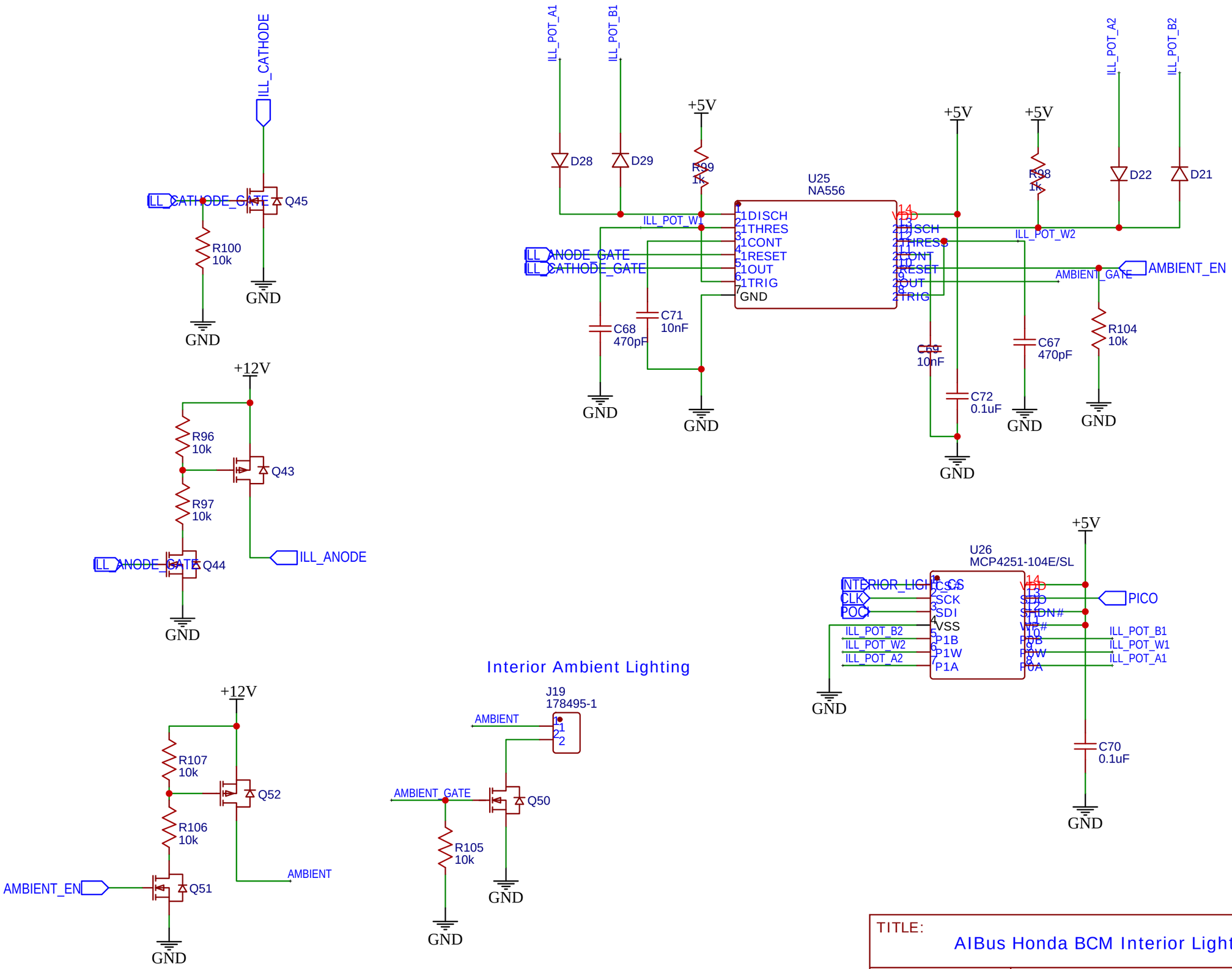

TITLE: AIBus Honda BCM Interior Light Controllers		REV: 1.0
EasyEDA	Company: AidF Electronics	Sheet: 1/1
	Date: 2025-12-26 Drawn By: Aidan C Franits	

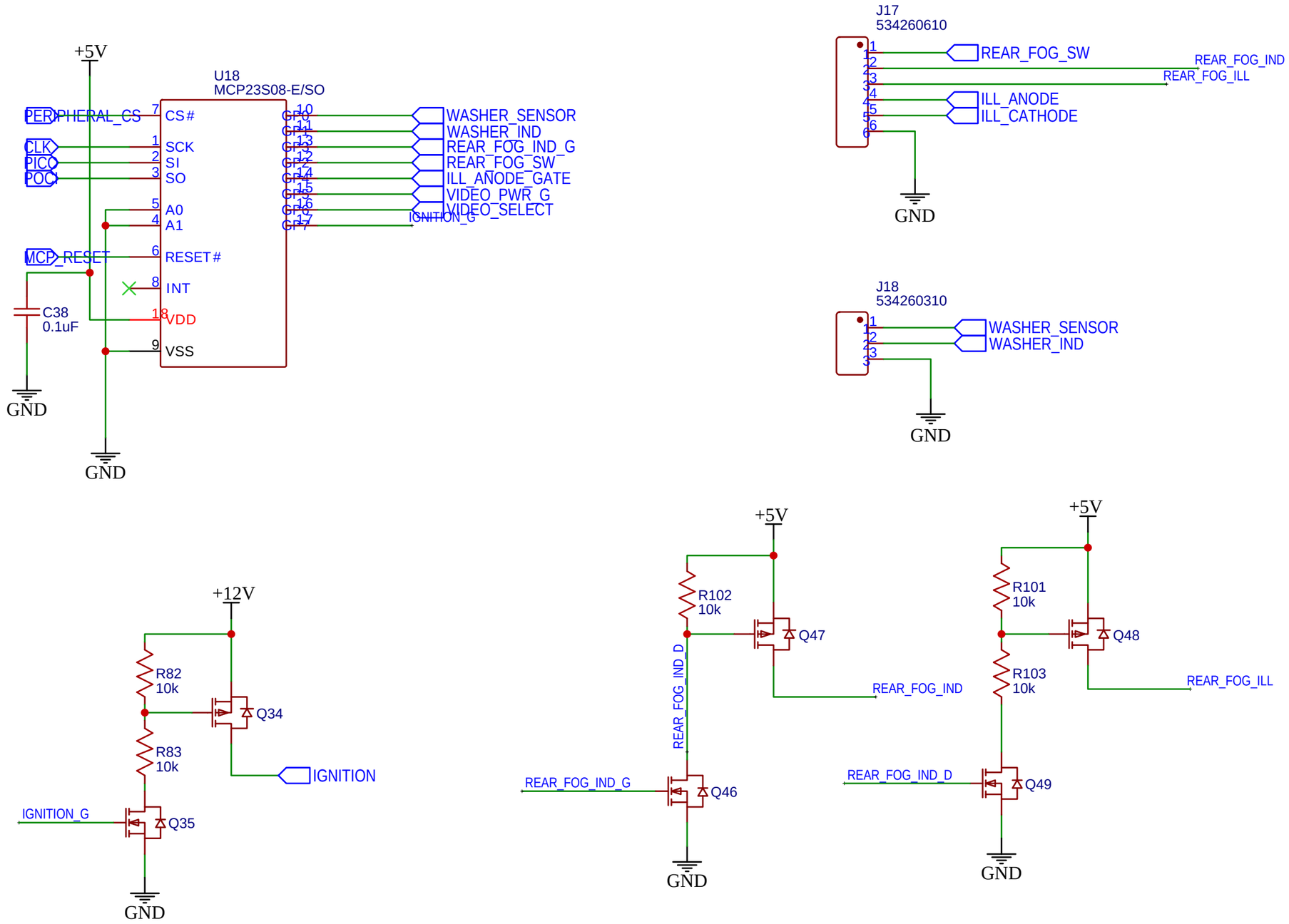

TITLE: AIBus Honda BCM Peripherals		REV: 1.0
EasyEDA	Company: AidF Electronics	Sheet: 1/1
	Date: 2025-12-19 Drawn By: Aidan C Franits	

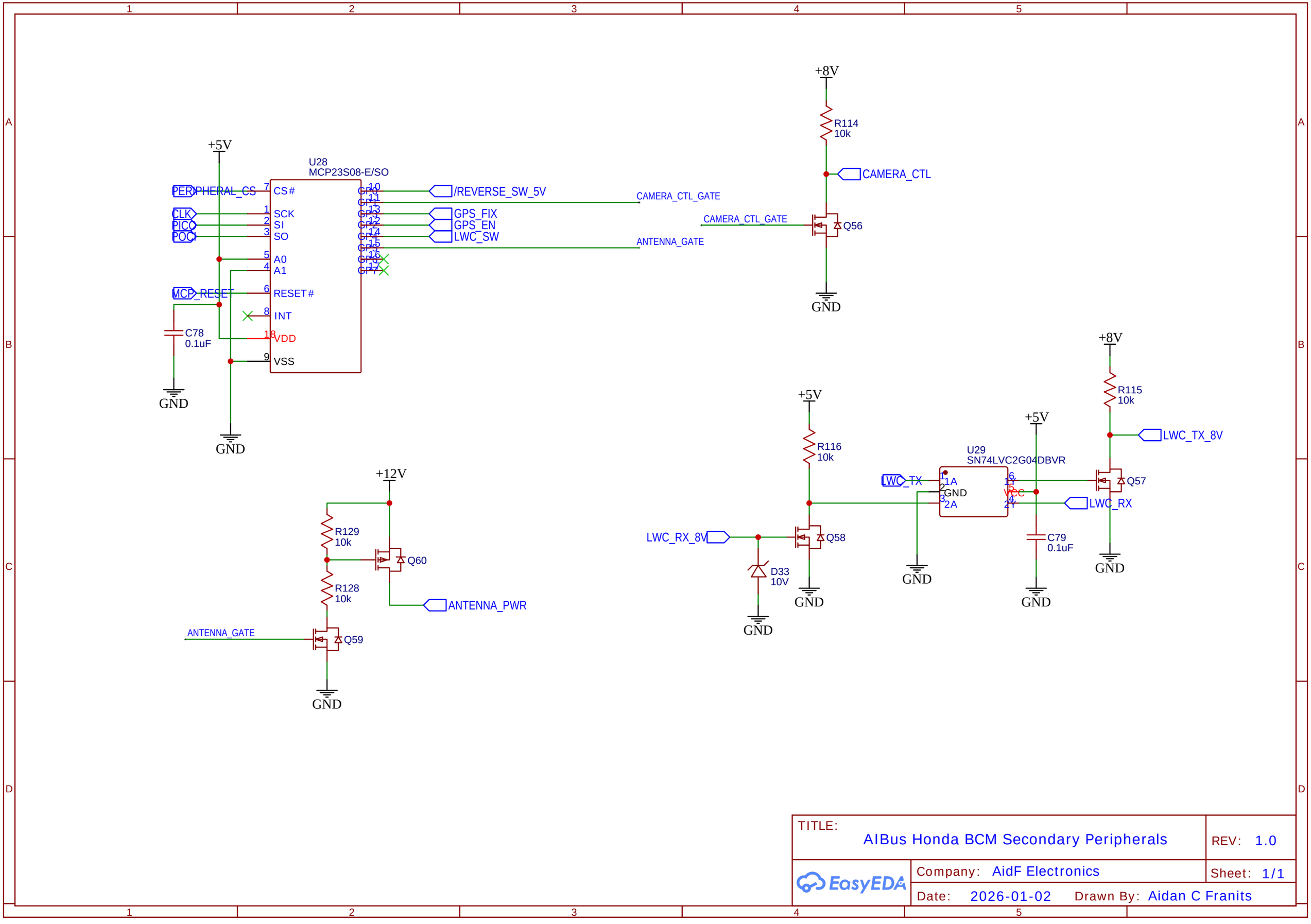
+5V
U28
MCP23S08-E/SO
PERIPHERAL_CS
CLK
PICO
POCI
MCP_RESET
CS#
SCK
SI
SO
A0
A1
RESET#
INT
VDD
VSS
GP0
GP1
GP2
GP3
GP4
GP5
GP6
GP7
/REVERSE_SW_5V
GPS_FIX
GPS_EN
LWC_SW
CAMERA_CTL_GATE
ANTENNA_GATE
C78
0.1uF
GND
+8V
R114
10k
CAMERA_CTL
Q56
R115
10k
LWC_TX_8V
Q57
R116
10k
Q58
LWC_RX_8V
D33
10V
U29
SN74LVC2G04DBVR
LWC_TX
1A
GND
2A
1Y
VCC
2Y
LWC_RX
C79
0.1uF
+12V
R129
10k
Q60
R128
10k
ANTENNA_PWR
ANTENNA_GATE
Q59
TITLE:
AIBus Honda BCM Secondary Peripherals
REV: 1.0
Company: AidF Electronics
Sheet: 1/1
Date: 2026-01-02
Drawn By: Aidan C Franits
EasyEDA

Use with the ATCCPYDM CVBS to USB converter.

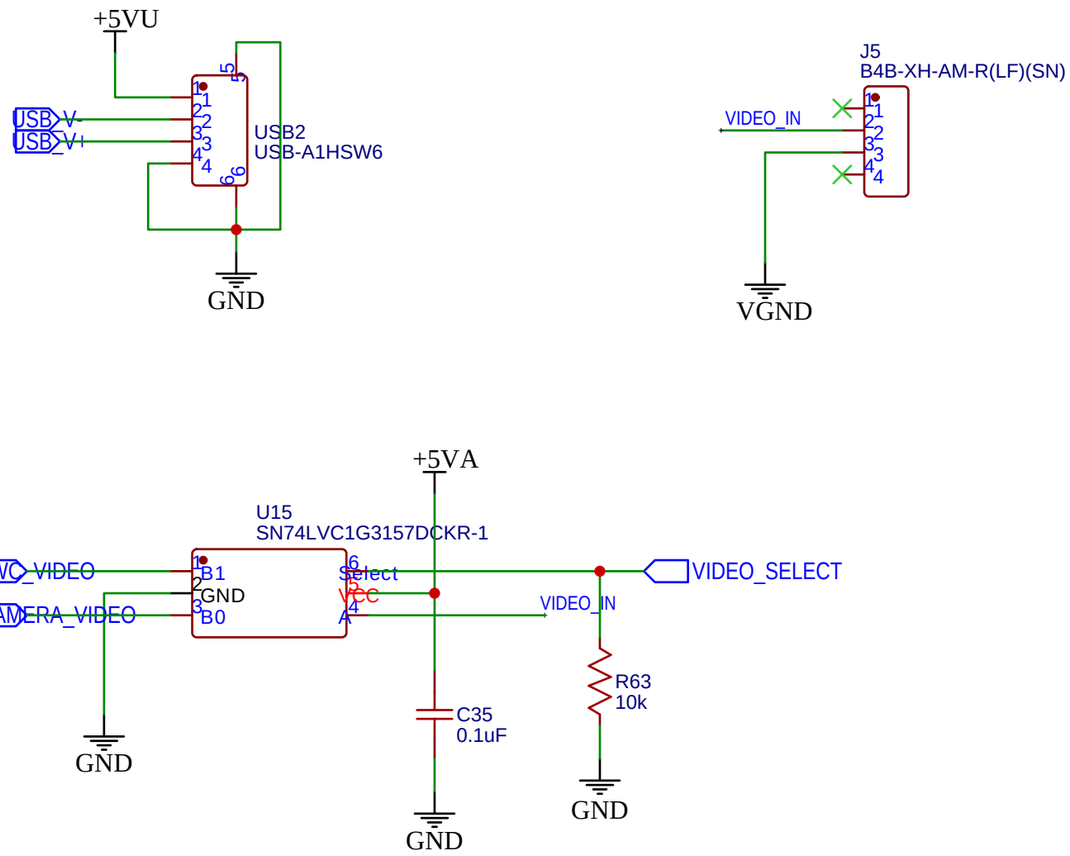

TITLE: AIBus Honda BCM Aux Light Controller Video Inlet	REV: 1.0
EasyEDA — Company: AidF Electronics	Sheet: 1/1
Date: 2025-12-15 Drawn By: Aidan C Franits	

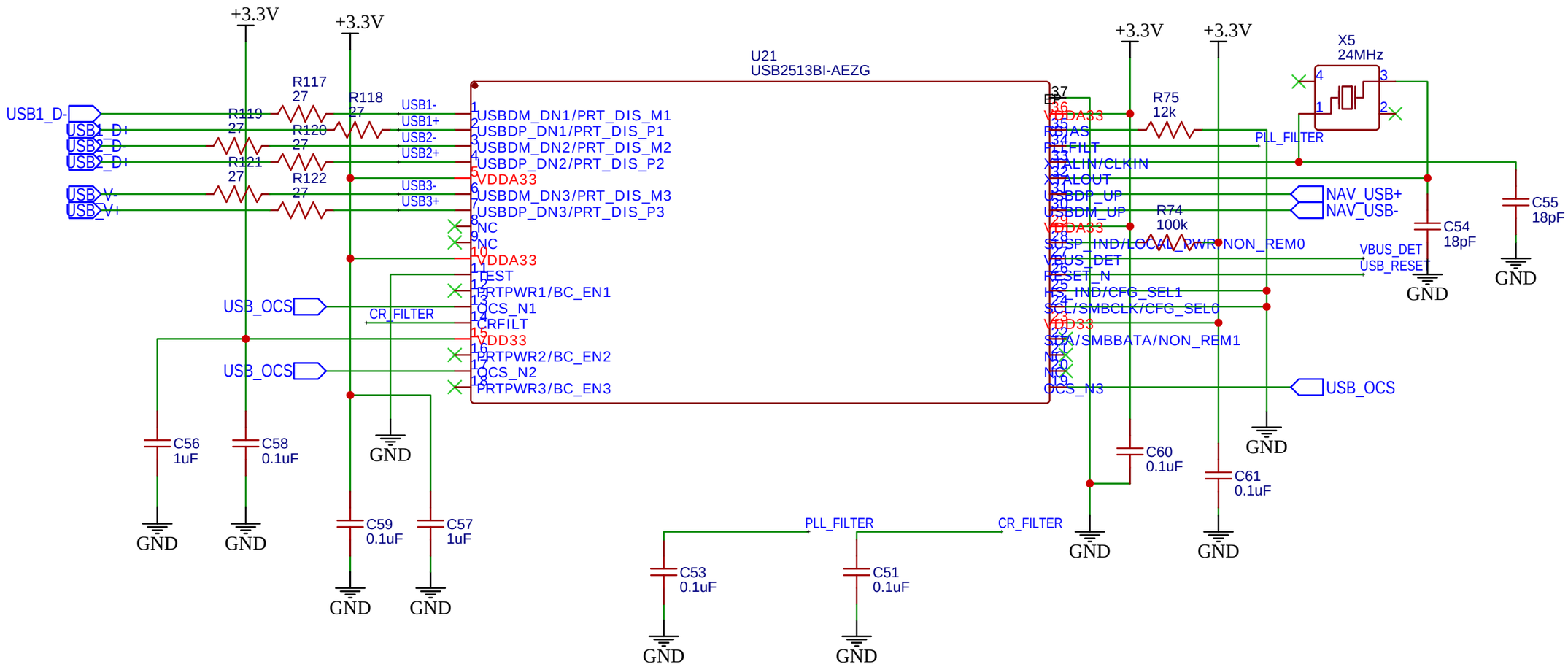

TITLE: AIBus Honda BCM USB Switch	REV: 1.0
Company: AidF Electronics	Sheet: 1/1
Date: 2025-12-20 Drawn By: Aidan C Franits	

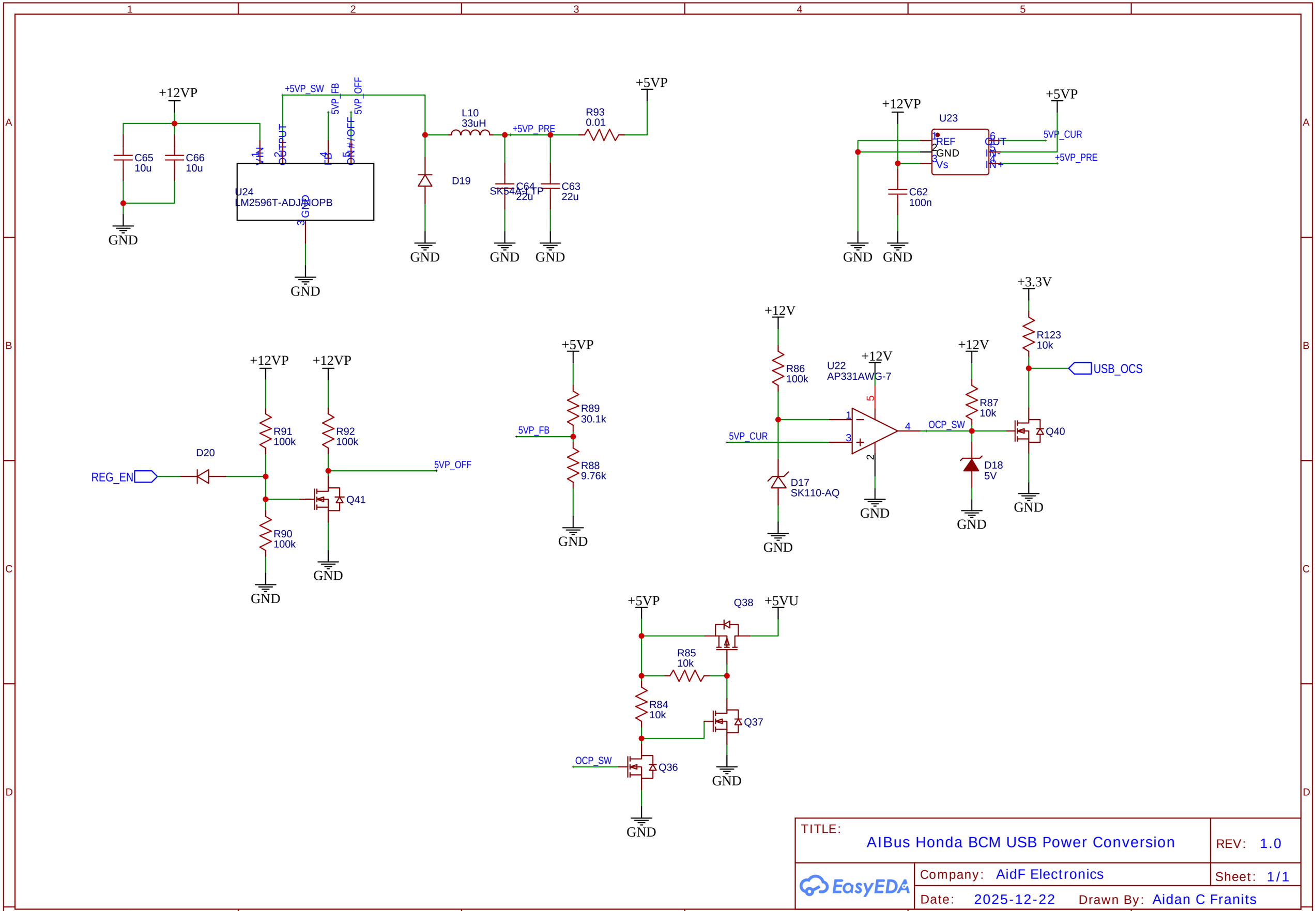

TITLE: AIBus Honda BCM USB Power Conversion	REV: 1.0
EasyEDA	Company: AidF Electronics
	Sheet: 1/1
	Date: 2025-12-22 Drawn By: Aidan C Franits

Use with Adafruit 746.

TODO: Level Shifter?

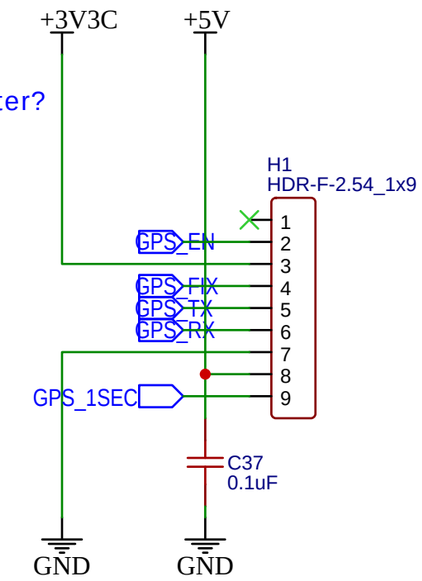

TITLE: AIBus Honda BCM GPS Interface		REV: 1.0
EasyEDA	Company: AidF Electronics	Sheet: 1/1
	Date: 2025-12-18 Drawn By: Aidan C Franits	

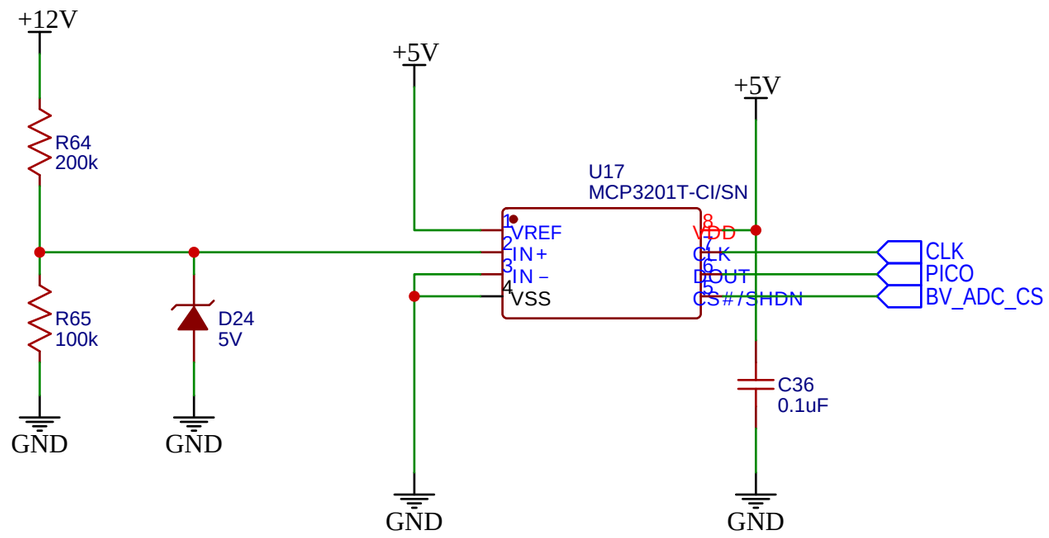

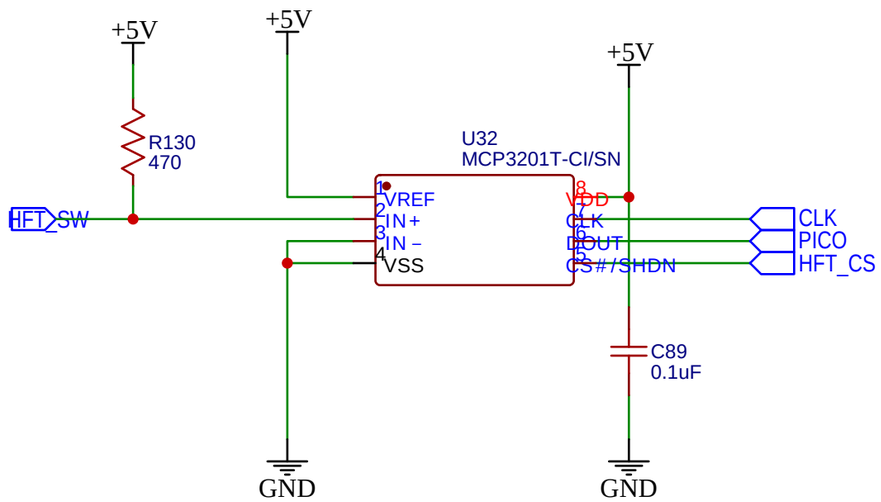

TITLE: AIBus Honda BCM ADCs		REV: 1.0
EasyEDA	Company: AidF Electronics	Sheet: 1/1
	Date: 2025-12-16 Drawn By: Aidan C Franits	